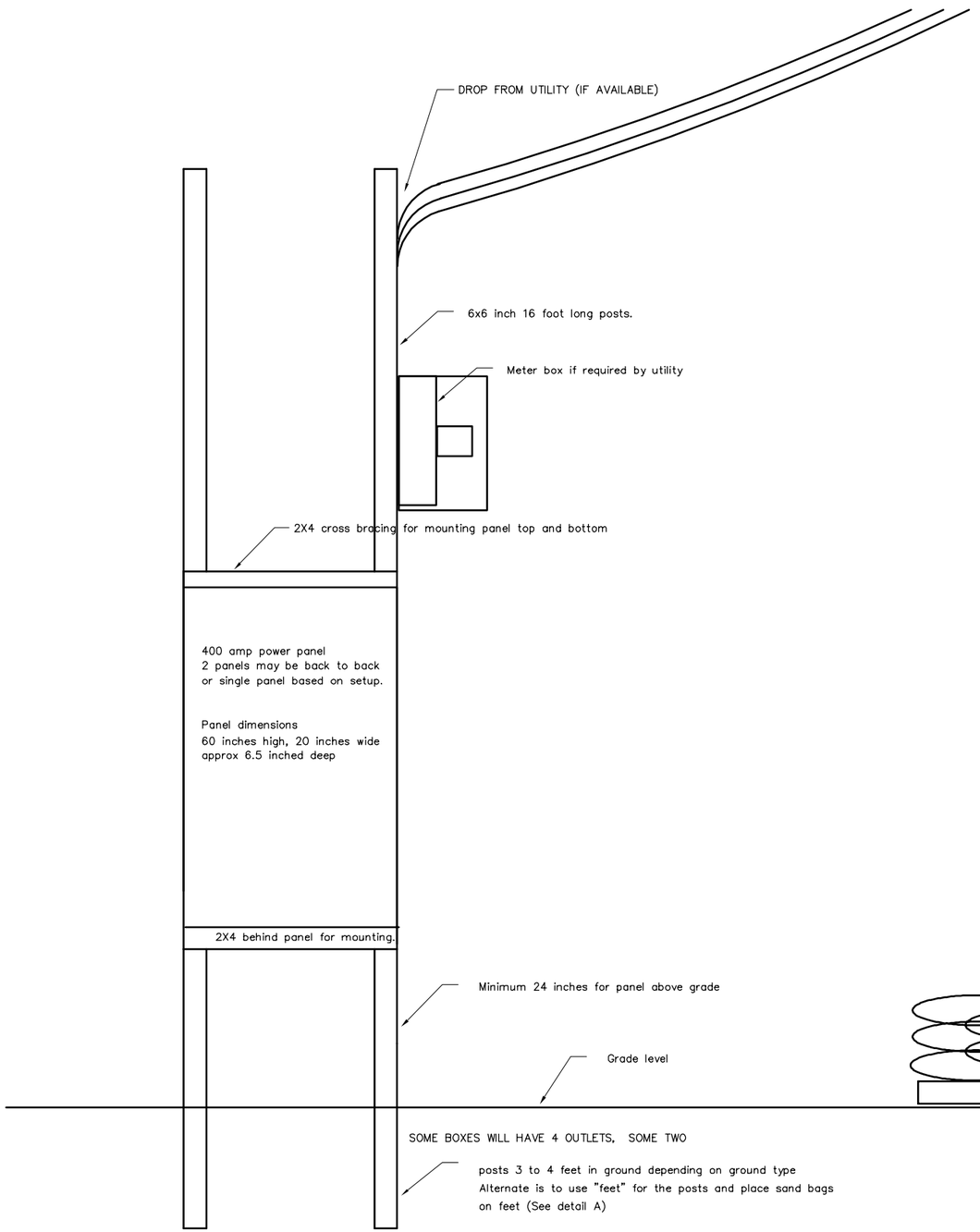

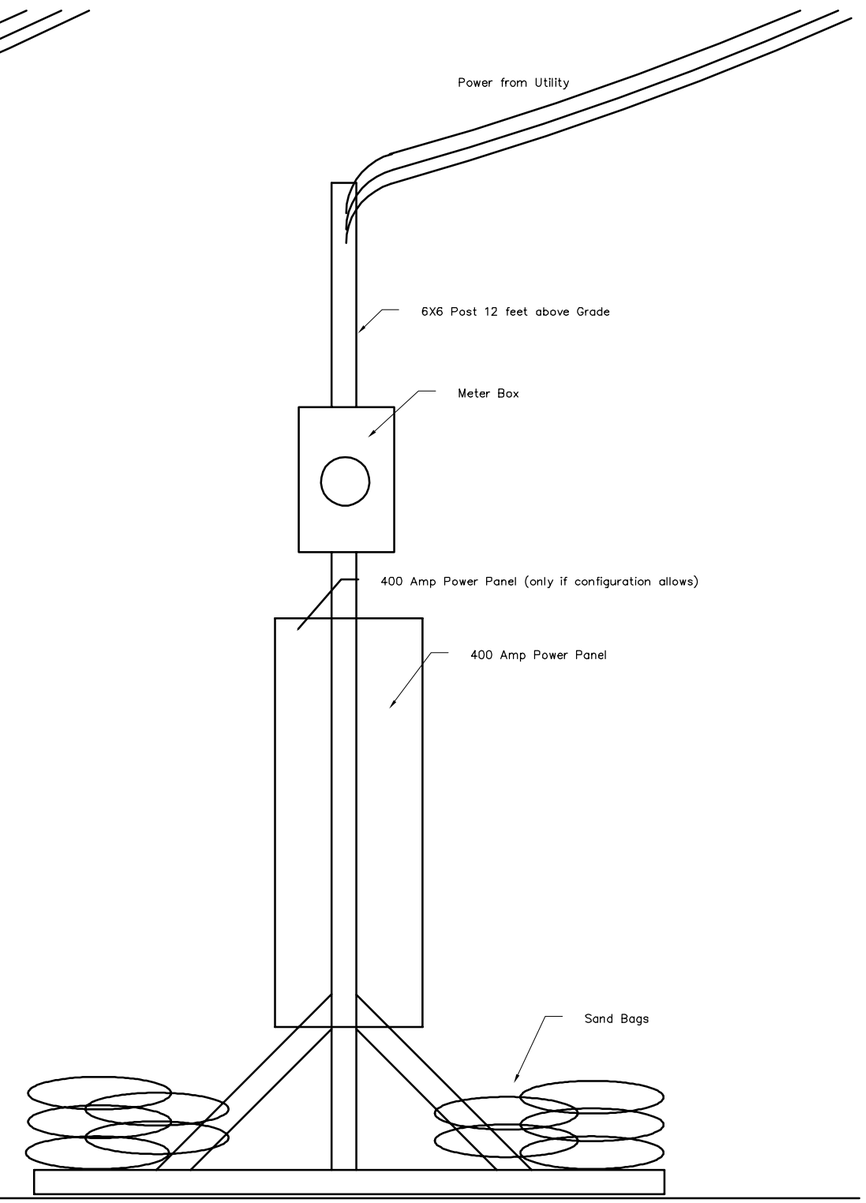

SCALE: NTS

US Army Corps of Engineers
Mobile District

Symbol	No.	Description	Date	Approved
		Revisions		

Designed By: –	Date: –		
Drawn By: –	File No. –		
Checked By: –	I.S.O. Sheet File Name: –		
Reviewed By: –	Solicitation Number: –		

U.S. ARMY ENGINEER DISTRICT
CORPS OF ENGINEERS
MOBILE, ALABAMA

FEMA
EGS
STANDARDS
–
400 AMP PANEL
MOUNTING DETAILS

Sheet Reference Number:
E–502